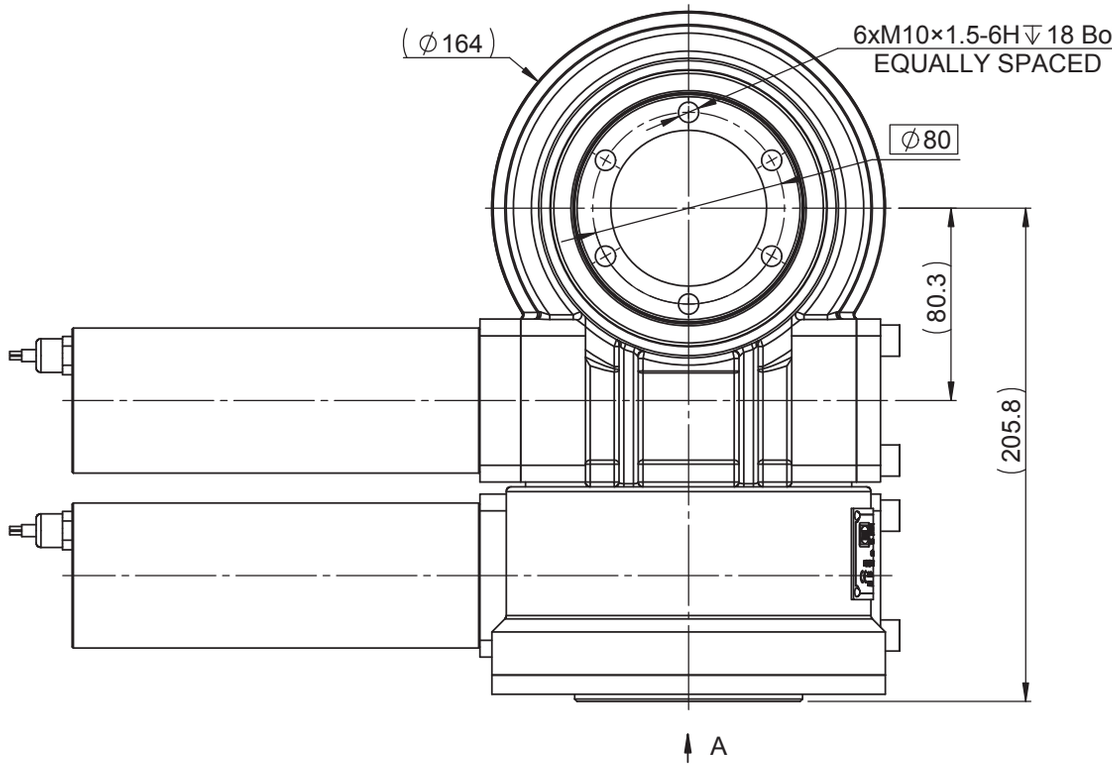
(∅164)
6xM10×1.5-6H↧18 Both Sides
EQUALLY SPACED
∅80
(80.3)
(205.8)
A

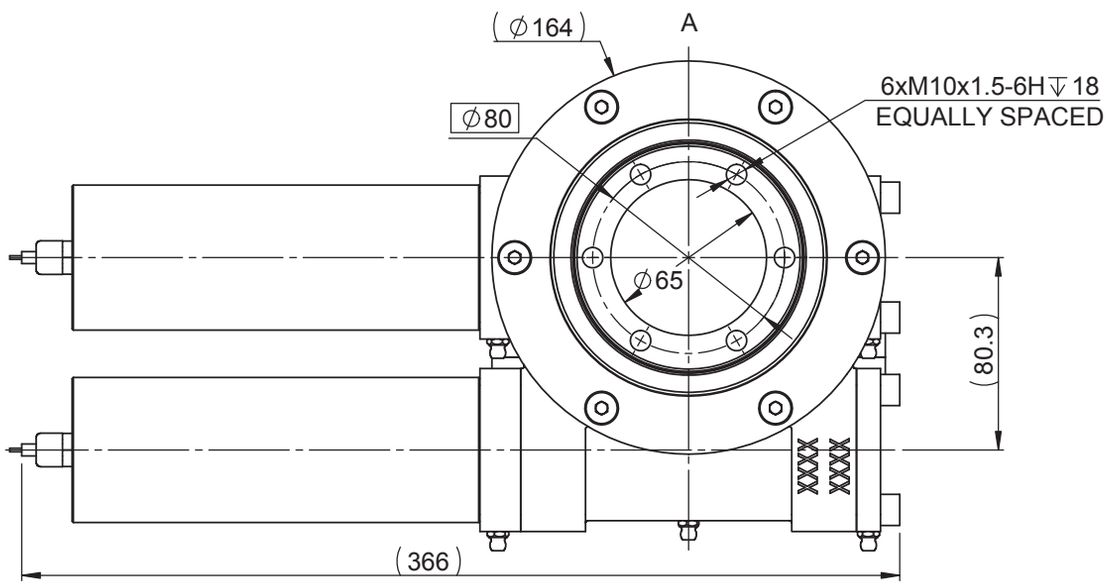
(∅164)
A
∅80
6xM10x1.5-6H↧18
EQUALLY SPACED
∅65
(80.3)
(366)

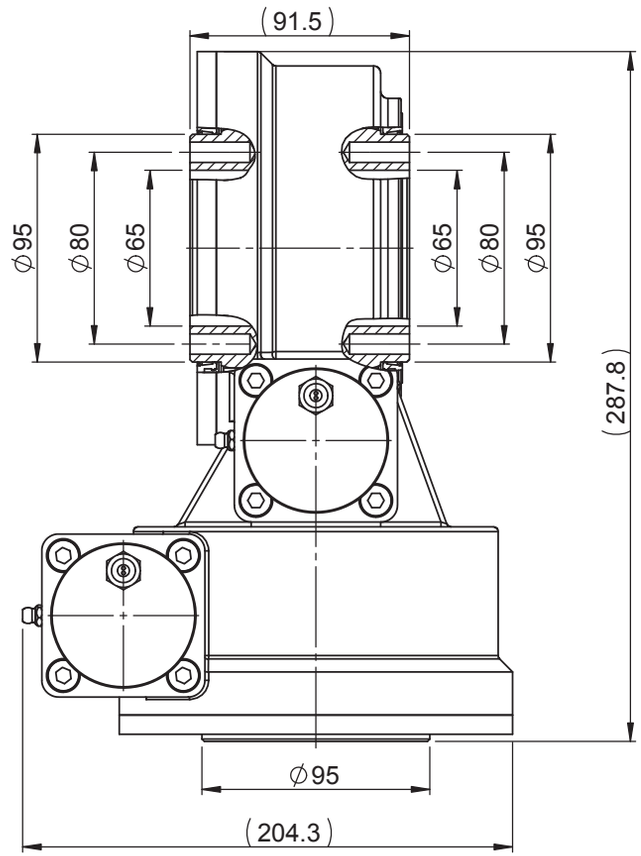
(91.5)
∅95
∅80
∅65
∅65
∅80
∅95
(287.8)
∅95
(204.3)

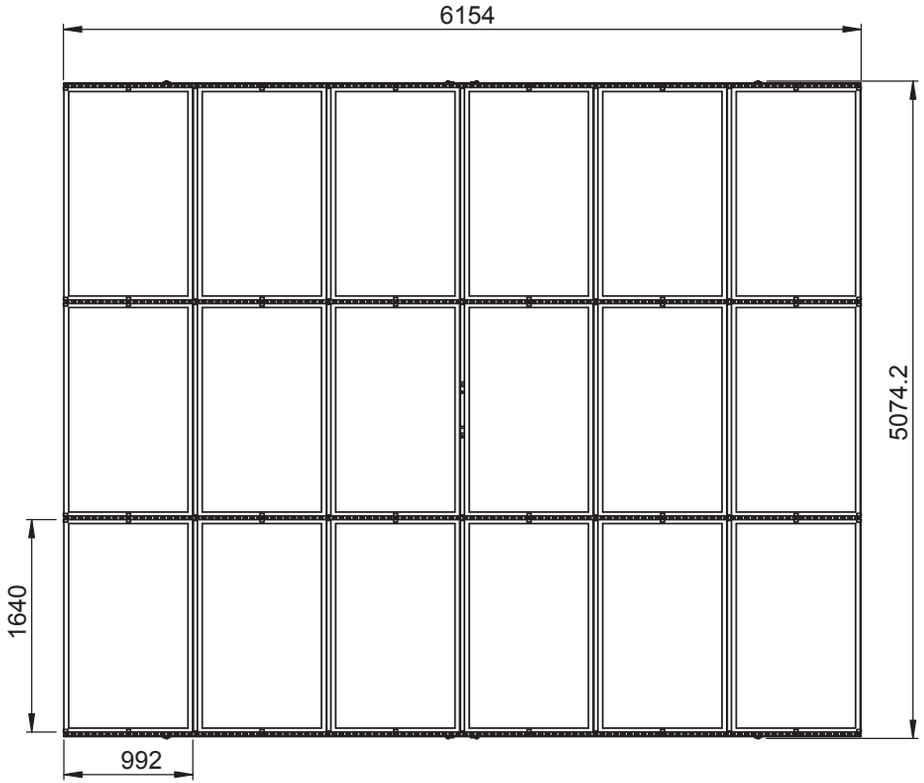

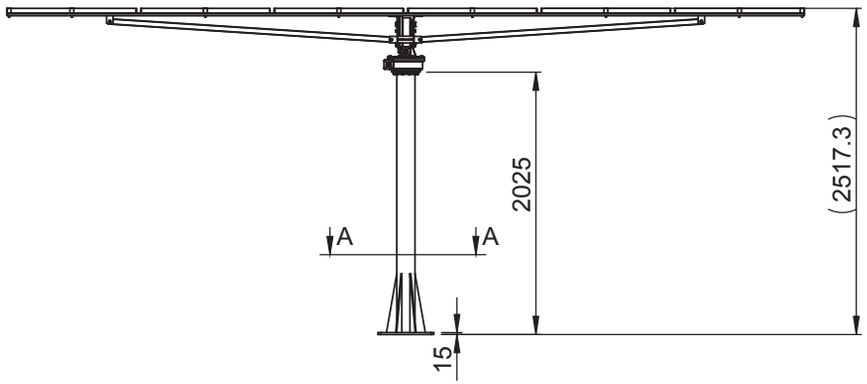
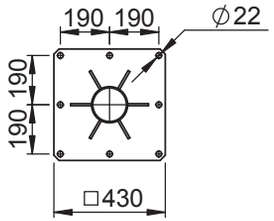
A-A(1:20)